DS-1273ZJ-140B

DS-2CC51xxP(N) Wall Mounting Bracket for Dome Camera (with Junction box)

Features:

- Aluminum alloy material with surface spray treatment
- The outlet hole makes the feature looks better
- Better water proof design
- Convenient installation coordinating with lower bowl

Dimension:

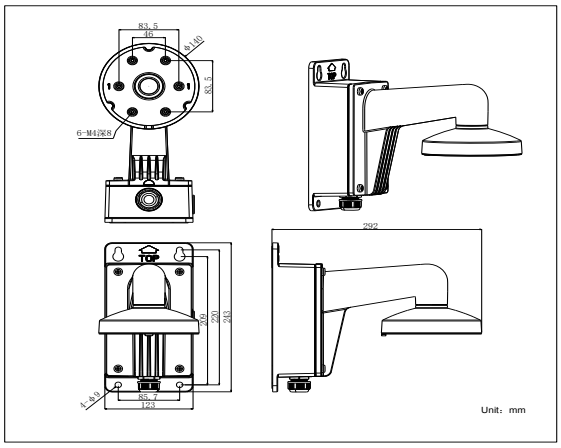

Order Model:

DS-1273ZJ-140B

Parameter:

Model / Parameters	DS-1273ZJ-140B DS-2CC51xxP(N) Wall Mounting Bracket for Dome Camera (with Junction box)
Appearance	Hikvision White
Range of Application	Suitable for DS-2CC51xxP(N) dome camera wall mounting
Material	Aluminum Alloy
Dimension	Φ140×182×120mm
Weight	1488g

Notice:

- The bracket is for DS-2CC51xxP(N)-VF dome camera
- Pay attention to the color matching when select bracket
- The bracket should be installed on flat wall
- The wall must be capable of supporting over 3 times as much as the total weight of the camera and the mount
- The maximum load capacity of the bracket is 4.5KG

Model Suitable:

DS-2CC51xxP(N)-VP
DS-2CC51xxP(N)-VPIR
DS-2CC51xxP(N)-VPIRH