DS-1294ZJ-PT

Wall Mount

Feature

- Plastic and steel with surface spray treatment
- Cable hole design facilitates the installation
- Applies to both indoor conditions, and outdoor conditions

Dimension

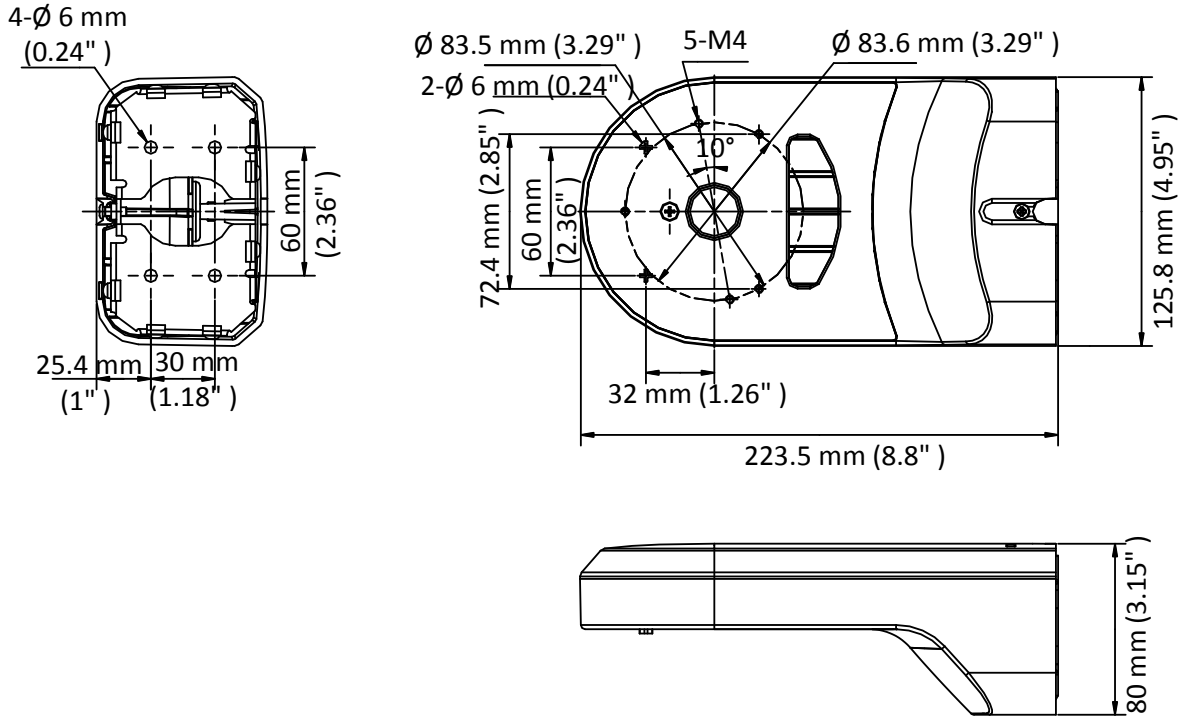

Available Model

DS-1294ZJ-PT

Parameter

Model / Parameters	DS-1294ZJ-PT
	Wall Mount
Appearance	Hikvision White
Material	Plastic and Steel
Dimension	223.5 mm × 125.8 mm × 80 mm (8.8" × 4.95" × 3.15")
Weight	480 g (1.06 lb.)

Note

- The wall must be capable of supporting at least 3 times as much as the total weight of the camera, and the mount.
- The mount's maximum load capacity is 3 kg (6.6 lb.).