TR-UP06-IN Pole Mount Adapter

Specifications

Bracket	TR-UP06-IN
Application	Outdoor, pole or rail installation
Dimensions(L × W × H)	136mmx127mmx62.4mm (5.4”x5.0”x2.5”)
Embrace hoop diameter	67mm~127mm(2.6”~5”)
Weight	0.75kg(1.65lb)
Material	Galvanized sheet

Dimensions

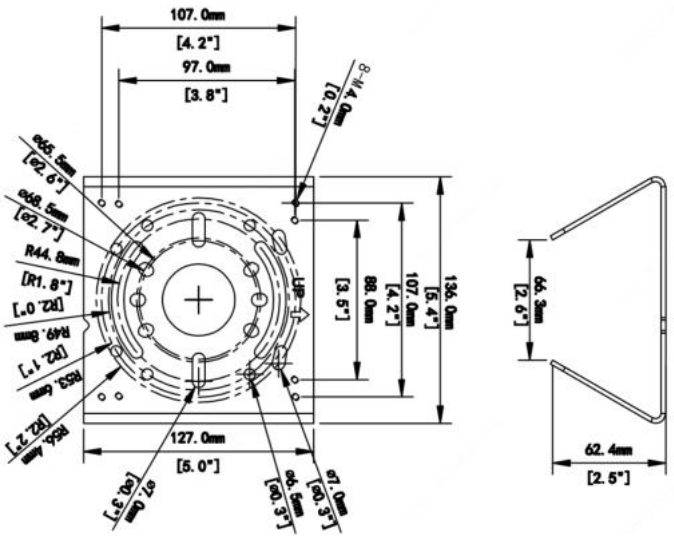

Zhejiang Uniview Technologies Co.,Ltd.

South Tower, Building 10, Wanlun Science Park, 88 Jiangling Road, Hangzhou, P.R.China 310051

Email：overseasbusiness@uniview.com;globalsupport@uniview.com

http://www.uniview.com

©2015 Zhejiang Uniview Technologies Co.,Ltd. All rights reserved.

*Product specifications and availability are subject to change without notice.