HIKVISION

DS-2CE78H0T-IT3FS/GREY
5 MP Audio Camera

- 5 MP, 2560 × 1944 resolution
- Digital WDR
- 2.8 mm, 3.6 mm, 6 mm fixed focal lens
- Smart IR, up to 40 m IR distance
- Audio over coaxial cable, built-in mic
- 4 in 1 video output (switchable TVI/AHD/CVI/CVBS)
- IP67

Specification

Camera	
Image Sensor	5 MP CMOS
Signal System	PAL/NTSC
Resolution	2560 (H) × 1944 (V)
Frame Rate	TVI: 5MP@20fps, 4MP@30fps, 4MP@25fps, 1080P@30fps, 1080P@25fps CVI: 4MP@30fps, 4MP@25fps AHD: 5MP@20fps, 4MP@30fps, 4MP@25fps CVBS: PAL/NTSC
Min. illumination	0.01 Lux@(F1.2, AGC ON), 0 Lux with IR
Shutter Time	PAL: 1/25 s to 1/50, 000 s NTSC: 1/30 s to 1/50, 000 s
Lens	2.8 mm, 3.6 mm, 6 mm fixed lens
Field of View	2.8 mm, horizontal FOV: 85.5°, vertical FOV: 63.7°, diagonal FOV: 110.7° 3.6 mm, horizontal FOV: 80.1°, vertical FOV: 63.7°, diagonal FOV: 105.9° 6 mm, horizontal FOV: 57.1°, vertical FOV: 43.1°, diagonal FOV: 72.5°
Lens Mount	M12
Day & Night	ICR
WDR (Wide Dynamic Range)	Digital WDR
Audio	Built-in mic
Angle Adjustment	Pan: 0 to 360°, Tilt: 0 to 75°, Rotation: 0 to 360°
Menu	
Image Mode	STD/HIGH-SAT
AGC	Yes
Day/Night Mode	Auto/Color/BW (Black and White)
White Balance	Auto/Manual
AE (Auto Exposure) Mode	DWDR/BLC/HLC/Global
Noise Reduction	2D DNR
Language	English
Function	Brightness, Sharpness, Mirror, Smart IR
Interface	
Video Output	Switchable TVI/AHD/CVI/CVBS
General	
Operating Conditions	-40 °C to 60 °C (-40 °F to 140 °F), humidity 90% or less (non-condensing)
Power Supply	12 VDC ± 25% **You are recommended to use one power adapter to supply the power for one camera.*
Power Consumption	Max. 3.7 W
Protection Level	IP67

General	
Material	Enclosure: Plastic Main Body: Metal
IR Range	Up to 40 m
Communication	HIKVISION-C
Dimensions	Φ 109.82 mm × 91.03 mm (Φ 4.32" × 3.6")
Weight	Approx. 300 g (0.66 lb.)

Available Model

DS-2CE78H0T-IT3FS

Dimension

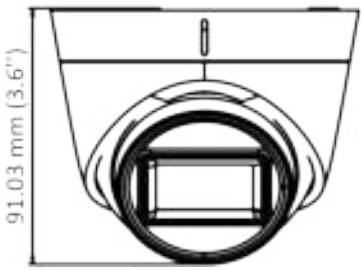

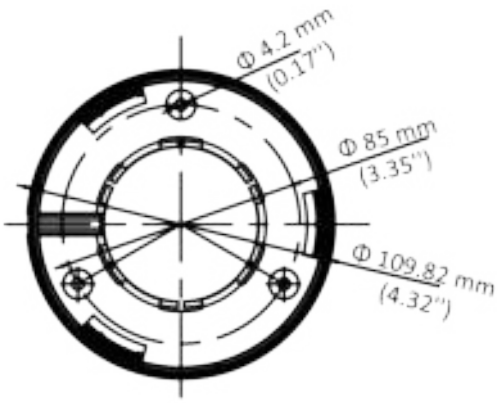

Accessory

DS-1272ZJ-110-TRS/GREY
Wall Mount

DS-1280ZJ-XS/GREY
Junction Box

DS-1281ZJ-S
Inclined-ceiling Mount

Distributed by

Headquarters
No.555 Qianmo Road, Binjiang District,
Hangzhou 310051, China
T +86-571-8807-5998
overseasbusiness@hikvision.com

Hikvision USA
T +1-909-895-0400
sales.usa@hikvision.com

Hikvision Europe
T +31-23-5542770
sales.eu@hikvision.com

Hikvision UK & Ireland
T +01628-902140
sales.uk@hikvision.com

Hikvision UAE
T +971-4-4432090
salesme@hikvision.com

Hikvision Russia
T +7-495-669-67-99
sales.ru@hikvision.com

Hikvision Australia
T +61-2-8599-4233
salesau@hikvision.com

Hikvision Italy
T +39-0438-6902
info.it@hikvision.com

Hikvision South Africa
Tel: +27 (10) 0351172
sale.africa@hikvision.com

Hikvision Singapore
T +65-6684-4718
sg@hikvision.com

Hikvision Korea
T +82-(0)31-731-8817
sales.korea@hikvision.com

Hikvision India
T +91-22-28469900
sales@pramahikvision.com

Hikvision Brazil
T +55 11 3318-0050
Latam.support@hikvision.com

Hikvision France
T +33(0)1-85-330-450
info.fr@hikvision.com

Hikvision Spain
T +34-91-737-16-55
info.es@hikvision.com

Hikvision Poland
T +48-22-460-01-50
info.pl@hikvision.com

Hikvision Canada
T +1-866-200-6690
sales.canada@hikvision.com

Hikvision Turkey
T +90 (216)521 7070- 7074
sales.tr@hikvision.com

Hikvision Kazakhstan
T +7-727-9730667
nikia.panfilov@hikvision.ru

Hikvision Tashkent
T +99-87-1238-9438
uzb@hikvision.ru

Hikvision Indonesia
T +62-21-2933759
Sales.Indonesia@hikvision.com

Hikvision Thailand
T +662-275-9949
sales.thailand@hikvision.com

Hikvision Malaysia
T +601-7852-2413
sales.my@hikvision.com

Hikvision Vietnam
T +84-974270888
sales.vt@hikvision.com

Hikvision Hong Kong
T +852-2151-1761
info.hk@hikvision.com

Hikvision Colombia
sales.colombia@hikvision.com

© Hikvision Digital Technology Co., Ltd. 2019 | Data subject to change without notice |